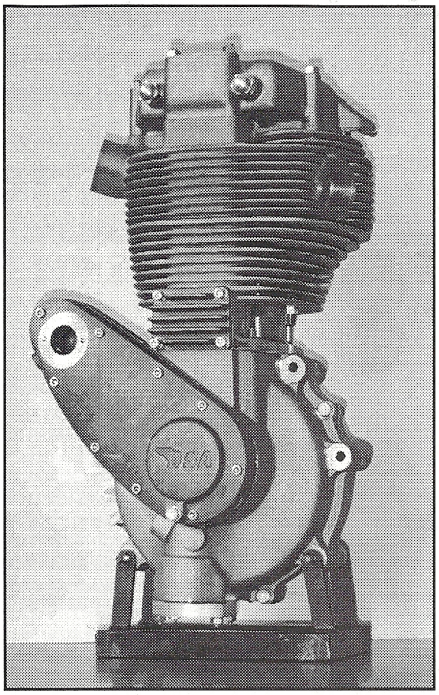

B.S.A. DBD34 Gold Star Engine

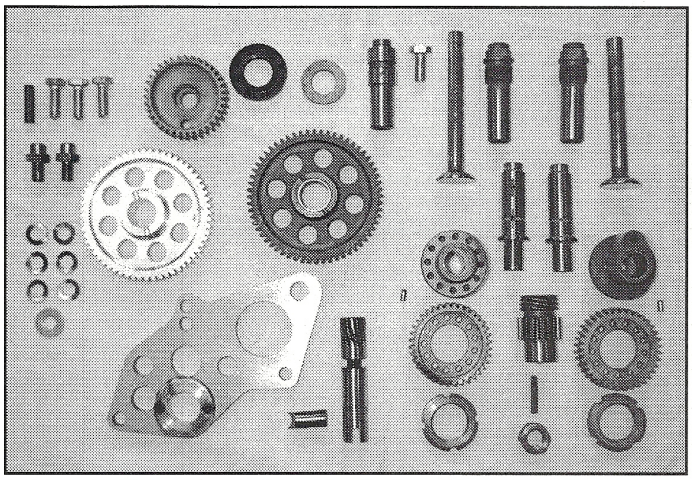

Components from the timing side (DBD34)
including vernier camshafts

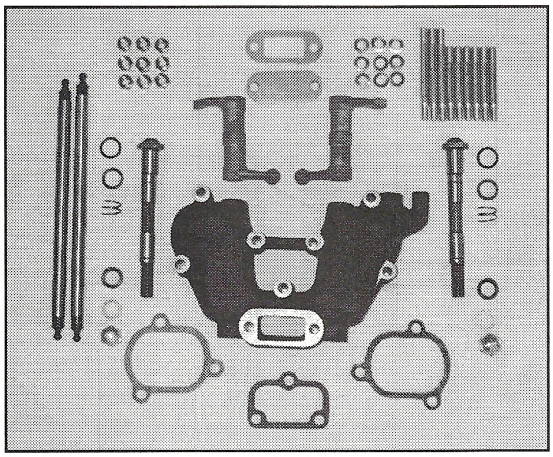

DBD34 rocker box

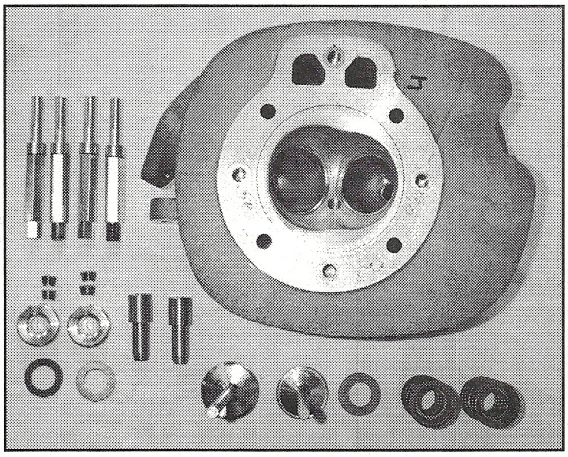

Special reinforced barrel for racing
Gold Star engines using through bolts.
Standard barrels in nicasil also available.

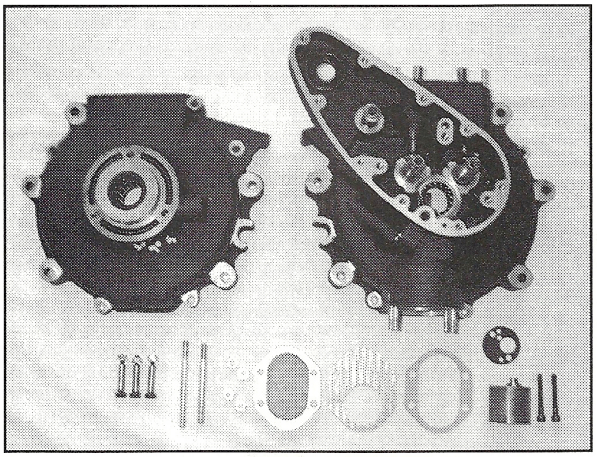

DBD34 magnesium crankcases
showing high volume oil pump

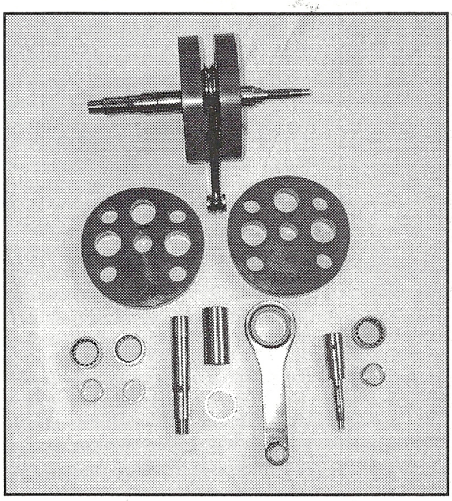

DBD34 crankshaft

The Illustrated Spare Parts List for the

LATE-TYPE GOLD STARS

Plate 1

ENGINE

Gold Star 500 c.c. Clubmans and Scrambles

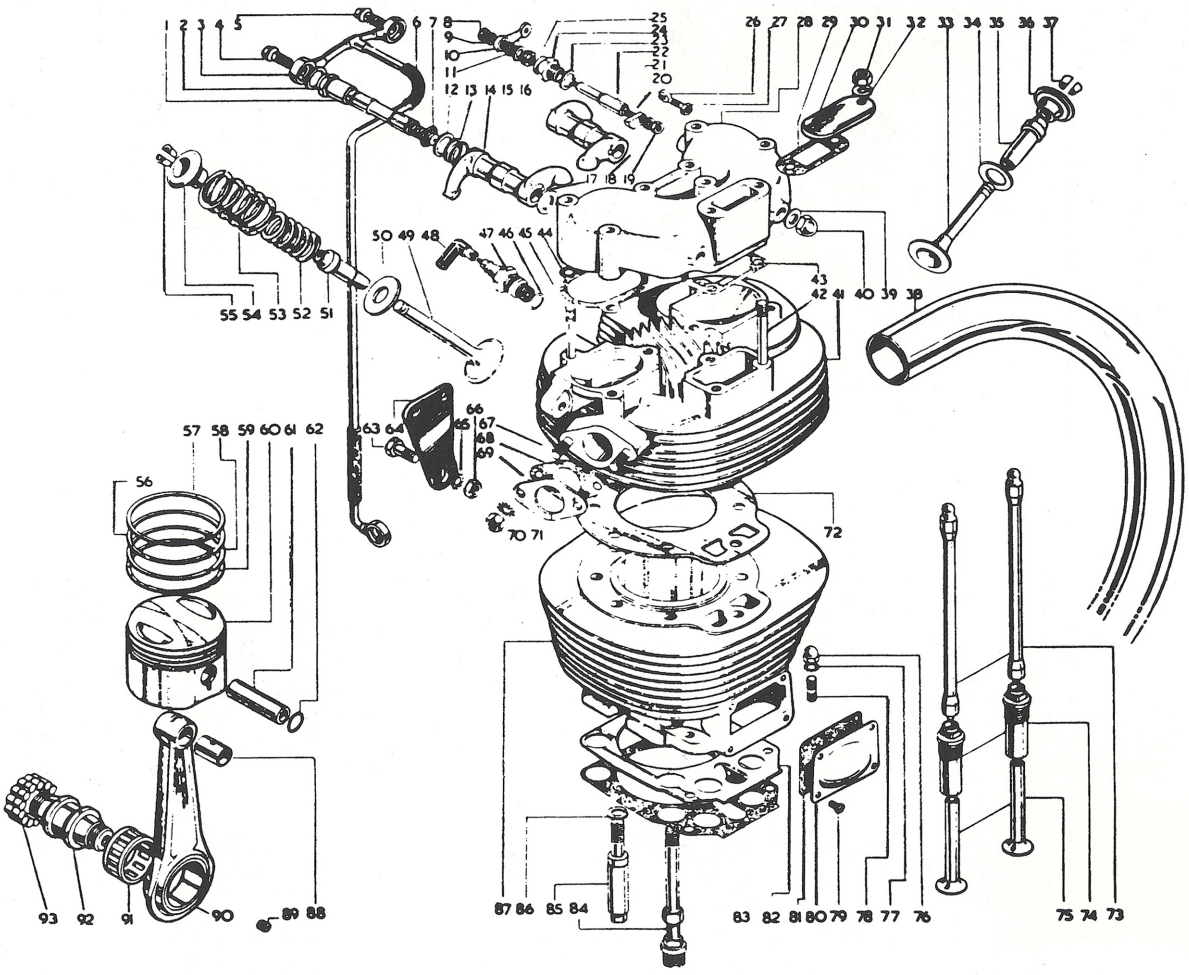

ENGINE PARTS GOLD STAR 500cc
CLUBMANS

Plate 1

Plate Ref. No.	Part No.	DESCRIPTION	Number Per Set
1	65-1854	Valve rocker fulcrum pin	2
2	31-8430	Rocker oil feed pipe banjo washer (copper	2
4	65-317	Rocker oil feed pipe banjo screw (inlet)	1
5	65-318	Rocker oil feed pipe banjo screw (exhaust)	1
7	65-1855	Valve rocker fulcrum pin cord ring	2
12	65-1118	Valve rocker fulcrum pin washer	2
13	65-1117	Valve rocker fulcrum pin spring	2
14	65-1852	Valve rocker (inlet)	1
16	65-1853	Valve rocker (exhaust)	1
17	65-1857	Valve rocker fulcrum thrust washer	2
28	65-1839	Rocker box	1
31	2 49	Rocker box stud nut	9
33	65-2512	Valve (exhaust)	1
34	65-2493	Valve spring insulating washer	1
35	65-646	Valve guide (exhaust)	1
36	65-2490	Valve spring collar (exhaust)	1
37	65-2459	Valve spring split cotter (exhaust) (halves)	2
39	15 39	Valve rocker fulcrum pin washer (copper)	2
40	65-1856	Valve rocker fulcrum pin nut	2
41	65-640	Cylinder head with fixed fittings	1
41	65-640S	Cylinder head with fixed fittings, special	1
42	65-1591	Cylinder head and rocker box stud (long)	3
45	65-1592	Cylinder head and rocker box stud (short)	6
49	65-647	Valve (inlet)	1
50	65-2498	Valve spring seat	2
51	65-645	Valve guide (inlet)	1
52	65-2495	Valve spring (inner)	2
53	65-2494	Valve spring (outer)	2
54	65-2490	Valve spring collar (inlet)	1
55	65-1848	Valve spring split cotter (inlet) (halves)	2
60	65-907	Piston complete (c.r. 10.25 to 1, Omega forged)	1
72	65-1818	Cylinder head gasket	1
73	65-1858	Push rod complete	2
74	65-1875	Tappet guide (inlet and exhaust)	2
75	65-2487	Tappet (inlet and exhaust)	2
76	65-930	Cylinder barrel stud nut	2
78	24-4227	Cylinder barrel stud	2
80	66-1936	Push rod tappet recess cover, alloy, finned	1
83	65-1650	Cylinder base shim (0.010")	
83	65-1651	Cylinder base shim (0.020")	
83	65-1652	Cylinder base shim (0.030")	
83	65-1653	Cylinder base shim (0.064")	
84	65-1840	Cylinder holding down bolt	4
85	65-1822	Cylinder head bolt (short)	4
87	65-1825	Cylinder barrel, Nikasil	1

Plate 2

ENGINE

Gold Star 500 c.c. Clubmans and Scrambles

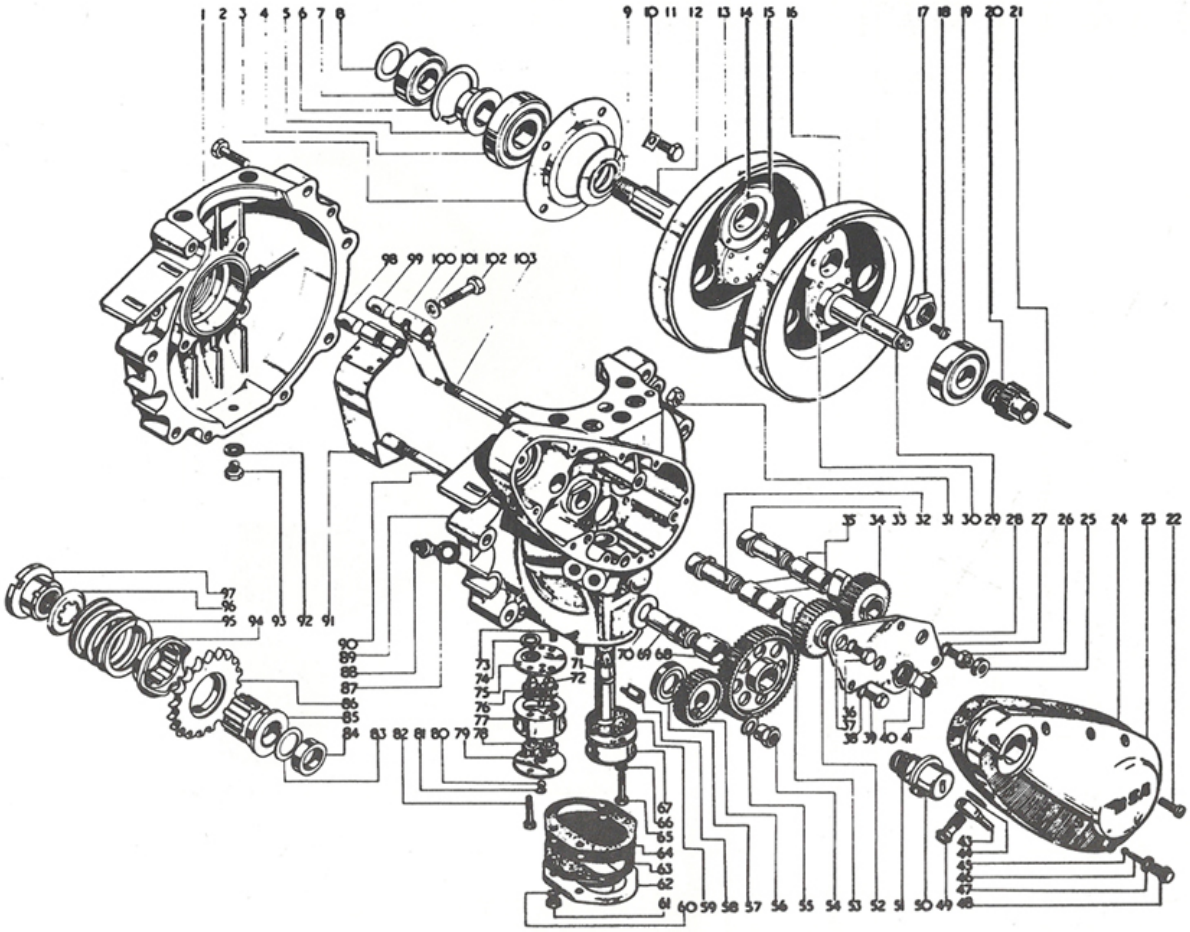

ENGINE PARTS GOLD STAR 500cc
CLUBMANS

Plate 2

Plate Ref. No.	Part No.	DESCRIPTION	Number Per Set
1	66-1681	Crankcase with fixed fittings (drive & timing side)	1
4	65-1388	Roller bearing (drive side)	1
5	65-1396	Engine shaft distance collar	1
7	65-2045	Roller bearing (drive side)	1
19	24-722	Roller bearing (gear side)	1
20	65-692	Engine shaft driving pinion	1
21	65-693	Engine shaft driving pinion key	1
22	65-2157	Timing cover screw	9
23	65-2503	Timing cover	1
24	65-1920	Timing cover washer	1
25	66-1923	Oil feed washer (rubber)	2
26	66-2007	Cam pinion spindle bolt	2
28	66-2008	Timing gear plate complete	1
31	2-49	Crankcase connecting bolt nut	5
32	65-2509	Cam pinion spindle (inlet)	1
33	65-2426	Cam pinion spindle (exhaust)	1
34	65-2446	Exhaust cam pinion complete	1
34	65-2446v	Exhaust cam pionion complete, Vernier adjustable	1
36	1-5069	Timing gear plate bolt	1
39	21-2902	Timing gear plate bolt (Whit.)	1
41	29-905	Engine shaft timing pinion nut	1
–	65-2505	Engine shaft oil seal	1
45	1-4675	Oil valve spring ball	1
46	66-1684	Oil valve spring	1
47	66-1683	Oil valve spring retaining screw washer (fibre)	1
48	65-2188	Oil valve spring retaining screw	1
50	65-1882	Engine breather valve	1
51	65-1883	Engine breather valve spring	1
52	65-2442	Inlet cam pinion complete	1
52	65-2442v	Inlet cam pinion complete, Vernier adjustable	1
53	65-1174	Magdyno drive idler pinion complete	1
56	65-1879	Magdyno driving pinion	1
57	65-2316	Magdyno driving pinion oil seal	1
58	65-2580	Oil pump driving spindle retaining pin	1
59	65-2618	Oil pump and crankcase joint washer	1
64	65-2623	Oil pump filter	1
67	65-2589	Oil pump set complete (special high volume)	1
69	65-2335	Magdyno drive idler pinion spindle	1
70	36-3528	Magdyno drive idler pinion thrust washer	1
71	66-2620	Oil pump driving spindle	1
77	65-2596	Oil pump body (cast iron)	1
90	2'-949	Crankcase stud (rear)	1
103	31-212	Crankcase stud (top) (rear)	1

ROAD RACE KIT
TO SUIT G50/GOLD STAR

DESCRIPTION
Special Magnesium 35mm Ceriani Forks complete with Yokes
Seeley MK2 Special Lightweight Frame Gold Star
Set of Engine Plates
Footrest Kit
Rear Brake Pedal
Petrol Tank
Oil Tank
Carbon Fiber Seat
Fairing Brackets
Special Oil and Petrol Caps
Rear Sprockets (8)
Alloy Handlebars
Head Bearings
Rear Wheel Hub Special Magnesium
Spokes and Nipples for Rear Wheel
Wheel Rim (2.15)
Rear Wheel Build
Swinging Arm Bearings
Rear Wheel Axle and Adjusters
Lightweight 6-Speed Gearbox (Low First Gear)
Gearbox Nuts
Gearbox Sprockets
Special Lightweight Belt Drive System
Rubbers for Frame
Filter for Oil Tank (Alloy)
Pushrod Clutch
Gearbox Adjuster
Gear Leaver (Alloy)
210mm Fontana Front Hub (Magnesium)
Amal 38mm Smooth Bore Carburettor
All the Above Items are excluding V.A.T. and shipping

USEFUL TECHNICAL & ENGINEERING FORMULAE

The following formulae can be used to great advantage by the aspiring engine builder. In studying these espressions you will have a better understanding of the relationship of many factors contributing to the development of horsepower in an internal combustion engine ... *to understand is to know, and to know is where it's at.*

TO CALCULATE PISTON DISPLACEMENT IN CC's

Displacement =

3.1416 x Cylinder Radious^2 x Piston Stroke (mm) x No. of Cyl.

COMPRESSION RATIO

$$\text{Ratio} = \frac{\text{Piston Displacement + Combustion Chamber Volume}}{\text{Combustion Chamber Volume}}$$

(Chamber volume can be arrived at by measuring with a graduated beaker and a SAE10 weight oil)

SUPERCHARGED OR TURBOCHARGED COMPRESSION RATIO

$$\text{Measured Compression Ratio} \times \frac{\text{Boost Pressure} \times 2}{14.69}$$

Figure one pound less atmospheric pressure per 2000 ft. above sea level.

BRAKE HORSEPOWER (BHP)

$$\text{BHP} = \frac{\text{RPM} \times \text{Torque (foot-pounds)}}{5252} \quad \text{or}$$

$$\text{BHP} = \frac{\text{CCs} \times \text{Mean Effective Pressure (MEP)} \times \text{RPM}}{792{,}000}$$

$$\text{SAE HP} = \frac{\text{Number of Cyliders} \times \text{Piston Diameter}^2}{2.5}$$

TORQUE (Ft.-Lbs.) The effort devoted to twisting or turning.

$$\text{Torque in foot-pounds} = \frac{\text{BHP} \times 5250}{\text{RPM}}$$

PISTON SPEED (Feet per minute; Ft./min.)

$$\text{Feet per minute} = \frac{\text{Stroke (in.)} \times \text{RPM}}{6}$$

$$\text{or} \quad \frac{\text{Stroke (mm)} \times \text{RPM}}{152.4}$$

BRAKE MEAN EFFECTIVE PRESSURE (BMEP)

See other formula also.

$$\text{BMEP (lbs./sq. in.)} = \frac{\text{BHP} \times 33{,}000}{\text{Stroke (ft.)} \times \text{Piston Area (sq. in.)} \times \text{RPM}}$$

MEAN PORT GAS VELOCITY (Ft./sec.)

$$\text{Feet per second} = \frac{\text{Piston speed}}{60} \times \frac{\text{Piston Diameter (ft.)}^2}{\text{Port Diameter (ft.)}^2}$$

MEAN VALVE GAS VELOCITY (Ft./sec.)

$$\text{Feet per second} = \frac{\text{Piston Speed}}{60} \times \frac{\text{Diameter of Piston (ft.)}^2}{\text{Valve throat dia. (ft.) Valve Lift (ft.)} \times 3.14}$$

BRAKE MEAN EFFECTIVE PRESSURE (Lbs./sq. in.)

Pressure on pistons

$$\text{BMEP} = \frac{\text{BHP} \times C}{\text{RPM}}$$

C= Constant for Total Engine CC's (4 Strk)

250cc = 52460 500cc = 26230

350cc = 37480 1000cc = 13125

MILES PER HOUR & FEET PER SECOND

$$\text{MPH} = \frac{\text{Distance in miles} \times 3600}{\text{Time in seconds}} \qquad \text{Ft./Sec.} = \frac{\text{MPH} \times 5280 \text{ ft.}}{3600}$$

AIR RESISTANCE TO RACE VEHICLE (RIDER INCLUDED)

Air Resistance in pounds =

Frontal Area (sq. ft.) x Velocity^2 (ft./sec.) x Drag Coefficient

.0008 is Average Drag Coefficient

.0002 is for Fully Streamlined

ROLLING RESISTANCE

Rolling Resistance (pounds) = Bike & Rider weight x .02

HORSEPOWER REQUIRED TO RUN A PREDETERMINED MPH

$$\text{Horsepower} = \frac{\text{Air + Rolling Resistance} \times \text{ft./sec.}}{550}$$

EXHAUST HEADER LENGTH

Using the stock inside diameter pipe this formula will give you the correct header length for one particular RPM. Calculate the Peak RPM at a point about 1000 rpm lower than the absolute peak to allow for reflex action, etc. in shifting, and also for having a *little extra* when needed. The length is measured from the centre of the piston when located at Bottom Dead Centre.

$$\text{Length in inches} = \frac{1700 \times {}^1/_2 \text{ exhaust cam duration}}{\text{RPM}} \quad (\pm \text{ One Inch})$$

Dyno is best means for determining exact length.

INTAKE MANIFOLD LENGTH FOR RAM-LOG APPLICATION

Using stock valve seat diameter to carburetor throat diameter being used. Length is measured from the centre of the piston at Top Dead Centre to the *beginning of the venturi taper* at the rear of the carburetor (where the air cleaner or velicity stack is clamped on).

$$\text{Length in inches} = \frac{1100 \times {}^1/_2 \text{ intake cam duration} \times 7}{\text{RPM}} \pm \text{One Inch}$$

GEAR RATIOS

$$\text{Any Gear Ratio} = \frac{\text{Gear Doing the Driving}}{\text{Gear Being Driven}}$$

$$\text{FINAL DRIVE RATIO} = \frac{\text{Rear Wheel Sprocket (teeth)}}{\text{Countershaft Sprocket teeth}}$$

CUBIC INCHES TO CUBIC CENTIMETRES

$$\frac{\text{Cubic Inches}}{.061} = \text{Cubic Centimetres (cc)}$$

CUBIC CENTIMETRES TO CUBIC INCHES

CC's x .061 = Cubic Inches

ONE ATMOSPHERE = 14.69 lbs./sq. in.; or 29.92 inches of Mercury; or 33.90 ft. of Water

ONE INCH OF MURCURY = .491 lbs./sq. in.

GLOSSARY

ATDC – After Top Dead Centre. A point in degrees of the crankshaft after the piston has past the top of the cylinder and is going down.

AREA UNDER THE LIFT CURVE – The actual length of the swept contact area of the cam lobe surface, commonly illustrated using curves that show lift and duration in graph form.

BASE CIRCLE – The diameter of the cam lobe from one flank side to the other flank side through the centre of the core usually. Not to be confused with the distance from heel to nose.

BBDC – Before Bottom Dead Centre. A point in degrees of the crankshaft before the piston reaches full bottom in the cylinder.

BDC – Bottom Dead Centre. When the piston reaches the exact bottom of the cylinder.

BOOST PRESSURE – amount of manifold pressure above the atmospheric pressure, as expressed in PSI (pounds per square inch).

BRAKE HORSEPOWER – BHP – The actual power developed at the crankshaft, as measured in dyno tests. BRAKE MEAN EFFECTIVE PRESSURE, BMEP, BMP – An imaginary figure calculated from the BHP which indicates average pressure in the cylinders on the power stroke, but allows for the mechanical engine losses.

CAM JOURNALS – The concentric bearing surfaces on a camshaft.

CAMSHAFT – The shaft in the engine that actuates the cam followers with accentric shapes called lobes. It controls the timing of the valves.

DECK HEIGHT – The distance between the outer top edge of the piston and the top of the cylinder. If the piston is higher it is usually called "positive deck height", and if lower it is called "negative deck height".

DETONATION – Fuel mixture exploding after its internal heat has built up to the point where it ignites all at once on its own.

DURATION – The number of camshaft degrees that the valve is in motion; also the number of cam degrees from one side of the cam to the other, such as used when checking-heights are given.

FLANK – The distance from where the lifter begins to rise up to the nose.

FLOAT – That point when a tracking follower leaves the cam surface and is literally in the air. Its return to the cam surface will produce a bounce and result in "pulling" material off of either one or both surfaces. In a short while a pronounced wear spot will be produced, and continued wear will result quickly.

HEEL – That portion of the cam lobe that is concentric with the centre of the cam core. . . and is used for adjusting the valve clearance.

HORSEPOWER – A unit of work; equal to 33,000 ft./lb. per minute; work done in lifting 33,000 lbs. a distance of one foot in one minute.

INLET VELOCITY – The speed at which the fuel mixture travels through the inlet tract.

LIFT – There are two lifts to consider in engines. . . cam lift and valve lift. Cam lift is determined by measuring follower lift and valve lift is determined by measuring actual valve lift.

LIFT RATE – The amount of cam lift per degree of cam rotation.

LOBE – The cam lobe is the part of the cam that raises and lowers the follower and is matched to the type of follower used in design; solid, hydraulic, roller, etc.

LOBE CENTRE – The angle in camshaft degrees between the centre-line of the intake and exhaust lobes of the same cylinder. Calculated by subtracting the intake opening from the exhaust opening, adding 180° and dividing by two. . . but, only when the durations of both lobes are the same.

MEAN EFFECTIVE PRESSURE, MEP – also referred to as Mean Indicated Pressure (MIP). The average pressure produced in the cylinders on the power stroke.

MECHANICAL EFFICIENCY – A factor expressed as a percentage, which indicates the amount of power left to do work after all losses take their toll; the percentage difference between MEP and BMEP.

NOSE – The point of highest lift on the lobe; the point farthest from the centre of the cam core.

OVERLAP – The number of crankshaft degrees from where the intake valve opens to where the exhaust valve closes, during which time both valves are open and crossflow is occurring. . . also called scavenge period.

PERCENTAGE OF CRANK BALANCE – The percent of weight used of the actual total weight of the rod and piston assembly to balance the crankshaft. . . i.e., if total weight is 500 grams, then 80% balance is using 400 grams to balance with.